SKY-HERO
THE HERO FACTORY

VIEW THE TUTORIALS ON OUR YOUTUBE CHANNEL!

Exploded views

Spyder

Kits [SKH00-401] [SKH00-402] [SKH00-403]

You've never been so close to be a Hero . . .

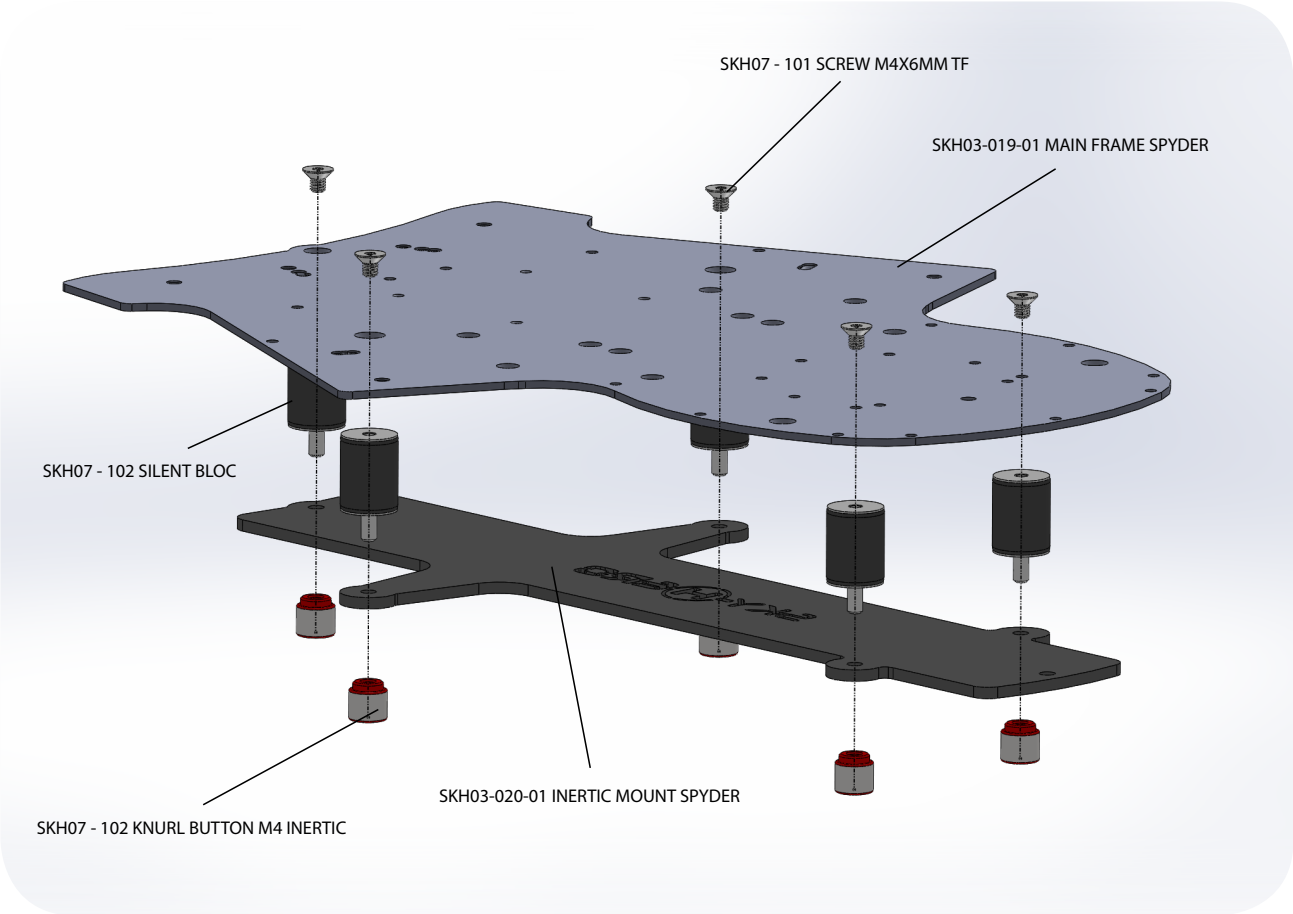
SKH07 - 101 SCREW M4X6MM TF
SKH03-019-01 MAIN FRAME SPYDER
SKH07 - 102 SILENT BLOC
SKH03-020-01 INERTIC MOUNT SPYDER
SKH07 - 102 KNURL BUTTON M4 INERTIC

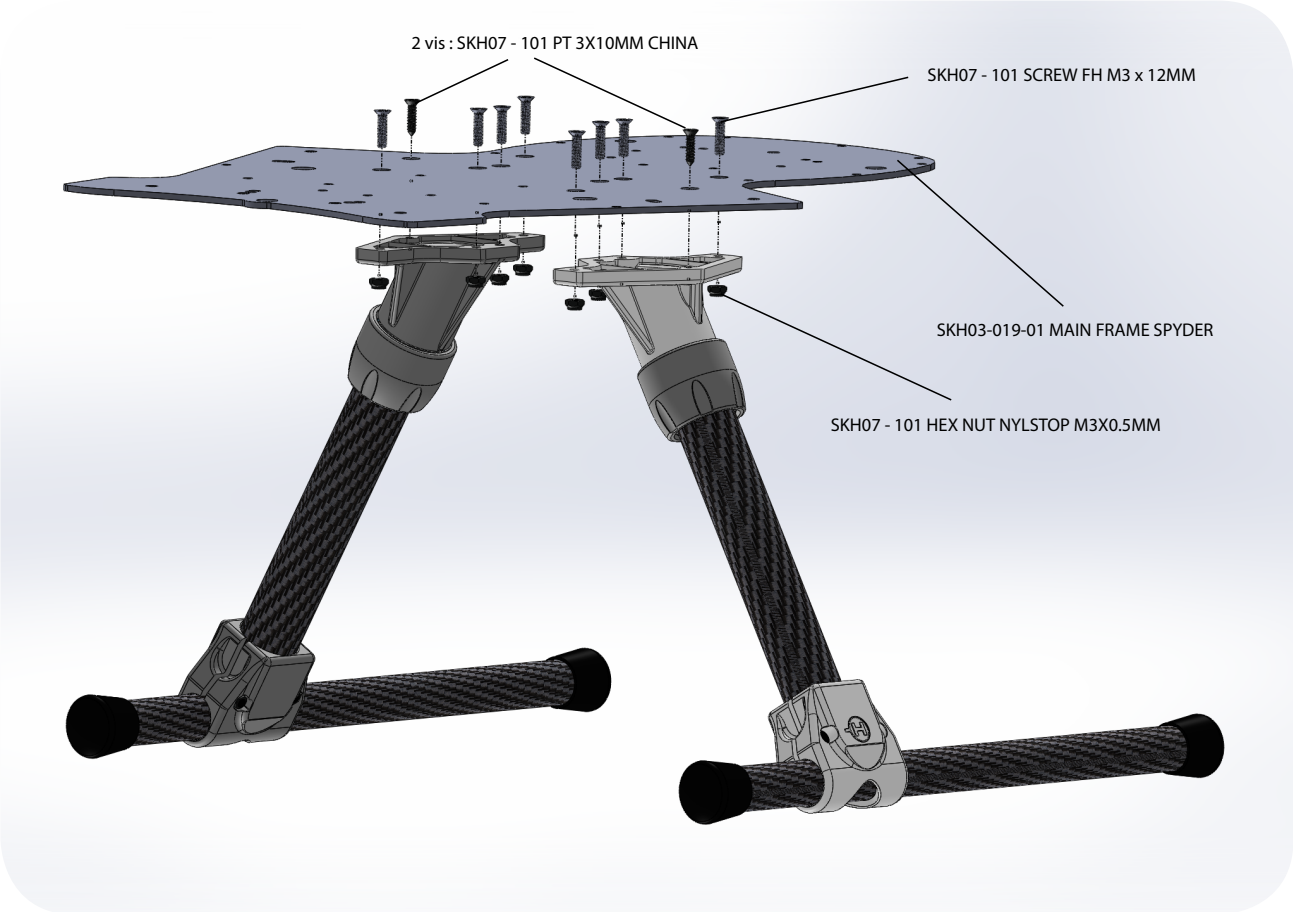
2 vis : SKH07 - 101 PT 3X10MM CHINA
SKH07 - 101 SCREW FH M3 x 12MM
SKH03-019-01 MAIN FRAME SPYDER
SKH07 - 101 HEX NUT NYLSTOP M3X0.5MM

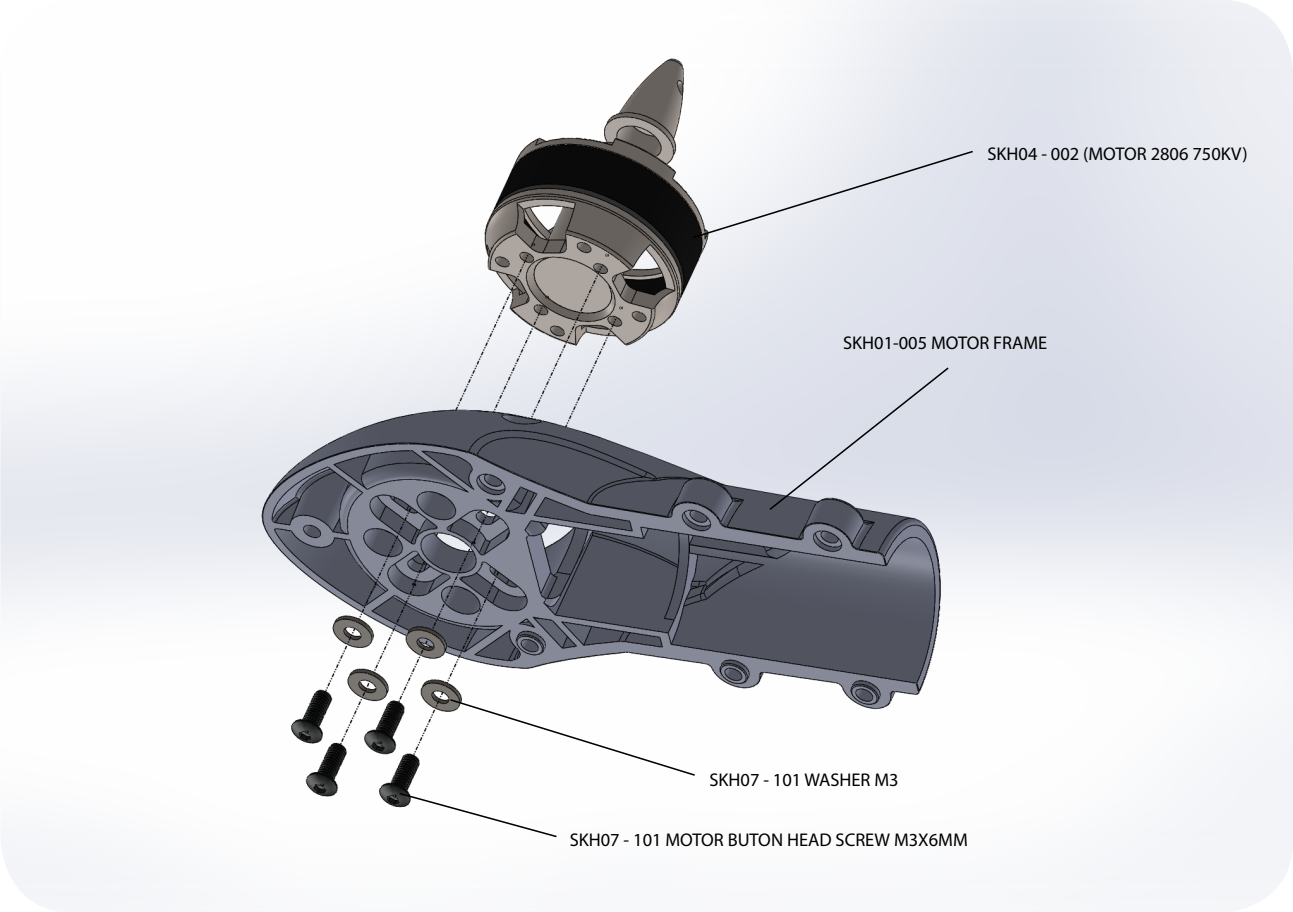
SKH04 - 002 (MOTOR 2806 750KV)
SKH01-005 MOTOR FRAME
SKH07 - 101 WASHER M3
SKH07 - 101 MOTOR BUTON HEAD SCREW M3X6MM

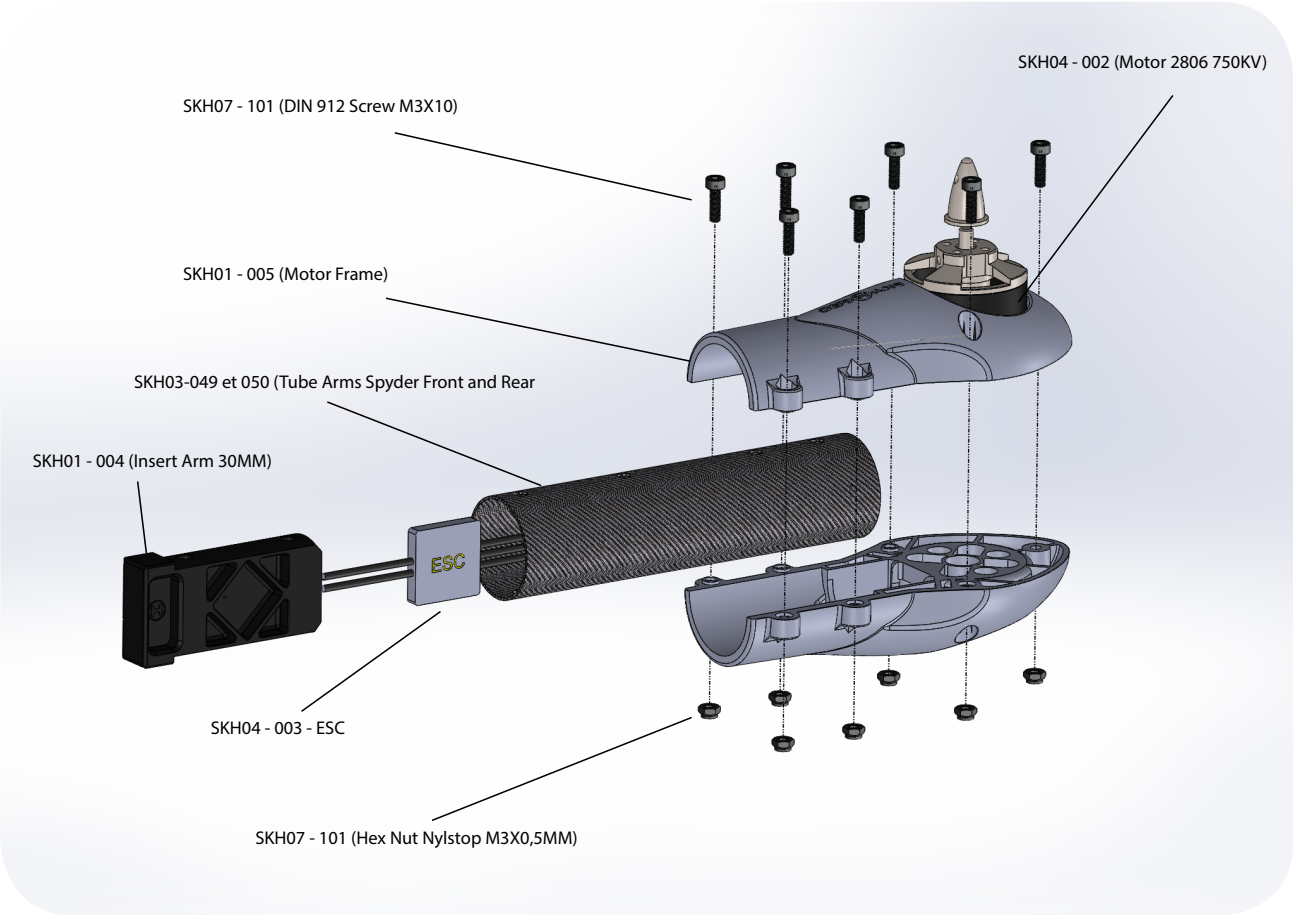
SKH04 - 002 (Motor 2806 750KV)
SKH07 - 101 (DIN 912 Screw M3X10)
SKH01 - 005 (Motor Frame)
SKH03-049 et 050 (Tube Arms Spyder Front and Rear
SKH01 - 004 (Insert Arm 30MM)
ESC
SKH04 - 003 - ESC
SKH07 - 101 (Hex Nut Nylstop M3X0,5MM)

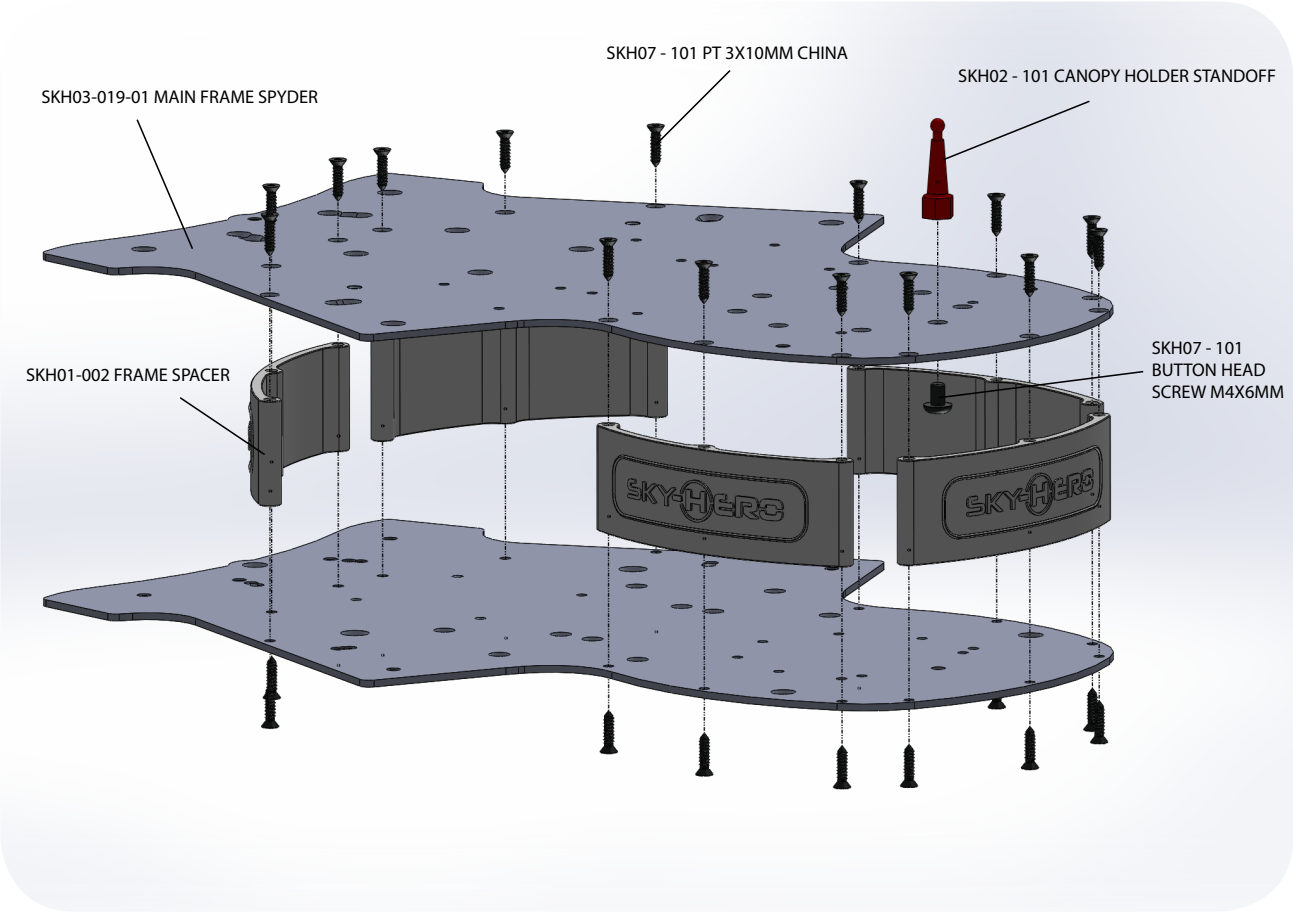
SKH07 - 101 PT 3X10MM CHINA
SKH02 - 101 CANOPY HOLDER STANDOFF
SKH03-019-01 MAIN FRAME SPYDER
SKH07 - 101
BUTTON HEAD
SCREW M4X6MM
SKH01-002 FRAME SPACER

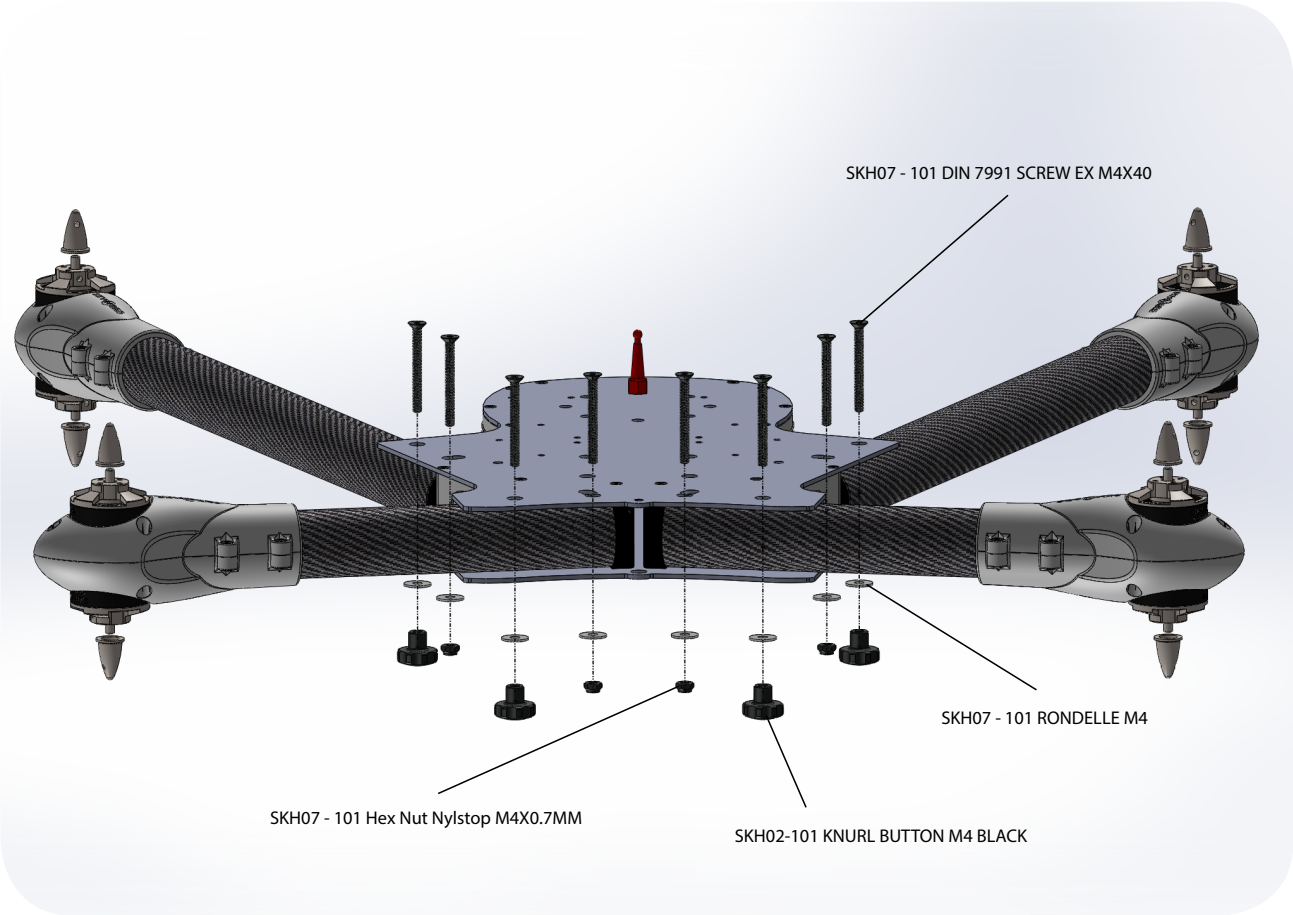
SKH07 - 101 DIN 7991 SCREW EX M4X40
SKH07 - 101 RONDELLE M4
SKH07 - 101 Hex Nut Nylstop M4X0.7MM
SKH02-101 KNURL BUTTON M4 BLACK

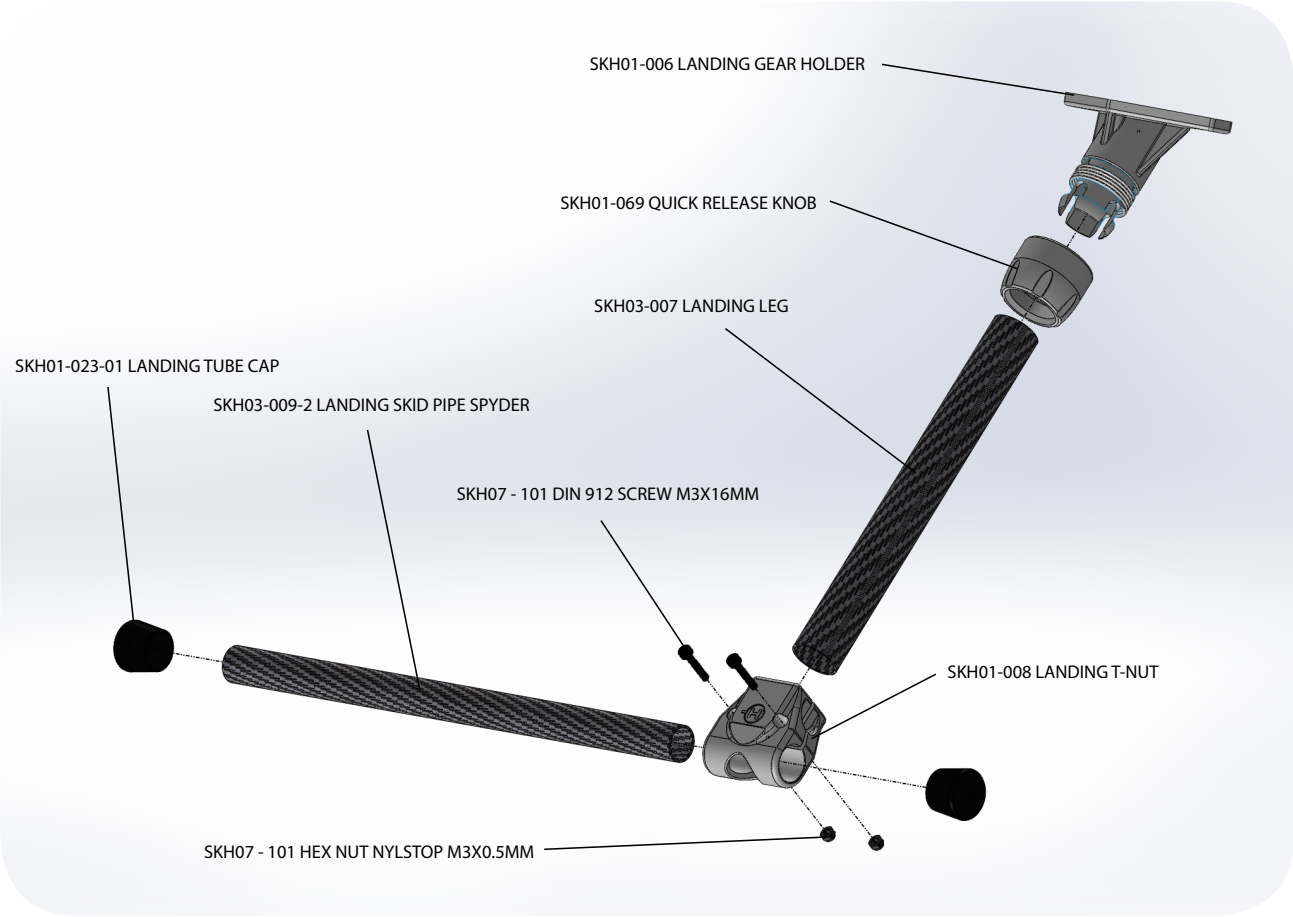
SKH01-006 LANDING GEAR HOLDER
SKH01-069 QUICK RELEASE KNOB
SKH03-007 LANDING LEG
SKH01-023-01 LANDING TUBE CAP
SKH03-009-2 LANDING SKID PIPE SPYDER
SKH07 - 101 DIN 912 SCREW M3X16MM
SKH01-008 LANDING T-NUT
SKH07 - 101 HEX NUT NYLSTOP M3X0.5MM

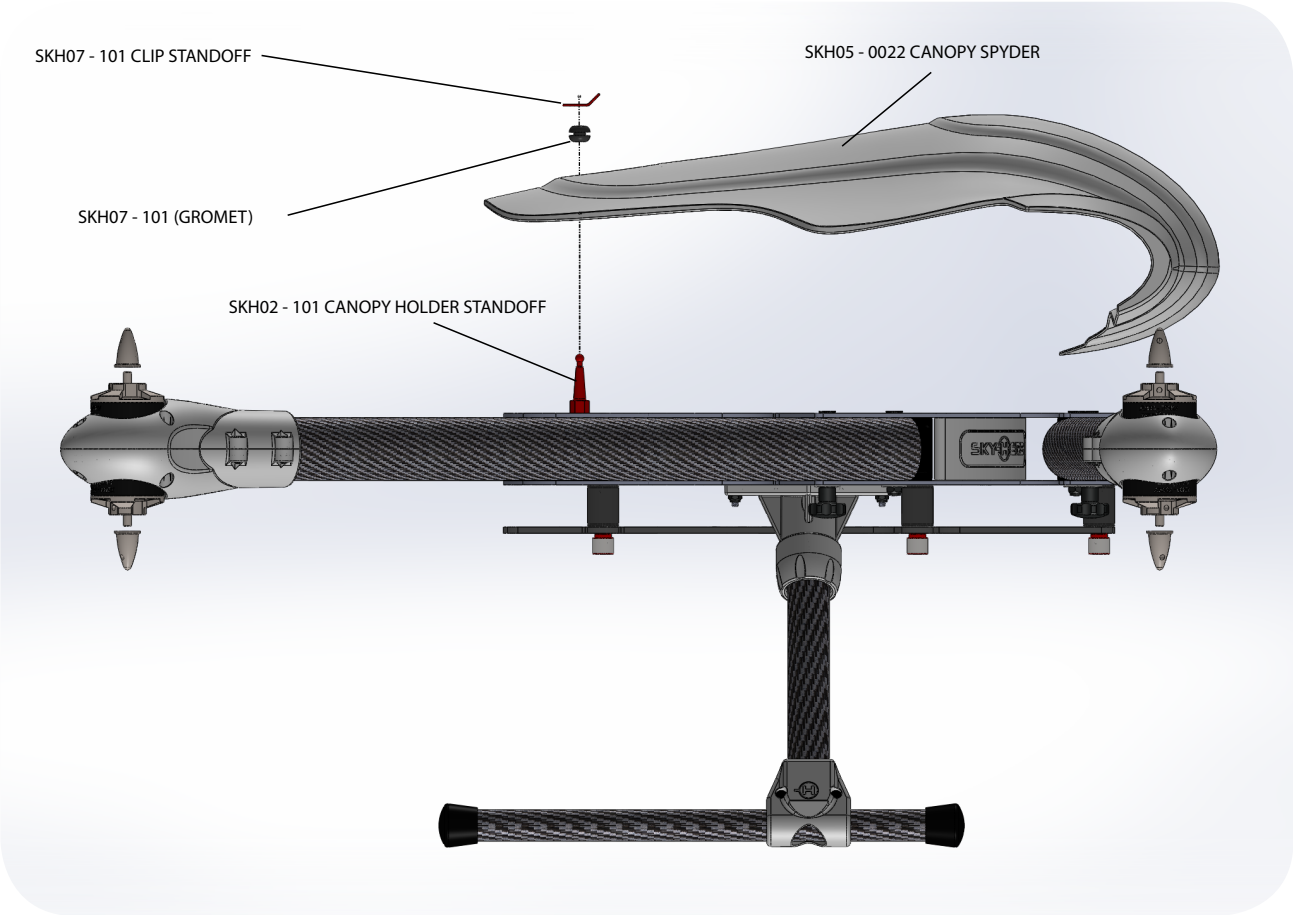
SKH07 - 101 CLIP STANDOFF
SKH05 - 0022 CANOPY SPYDER
SKH07 - 101 (GROMET)
SKH02 - 101 CANOPY HOLDER STANDOFF